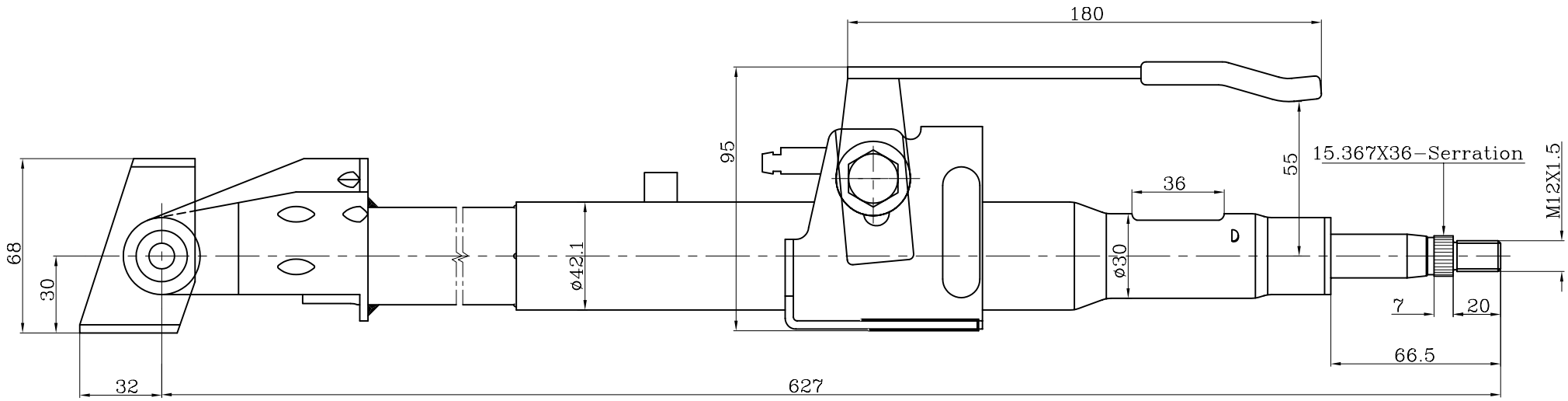

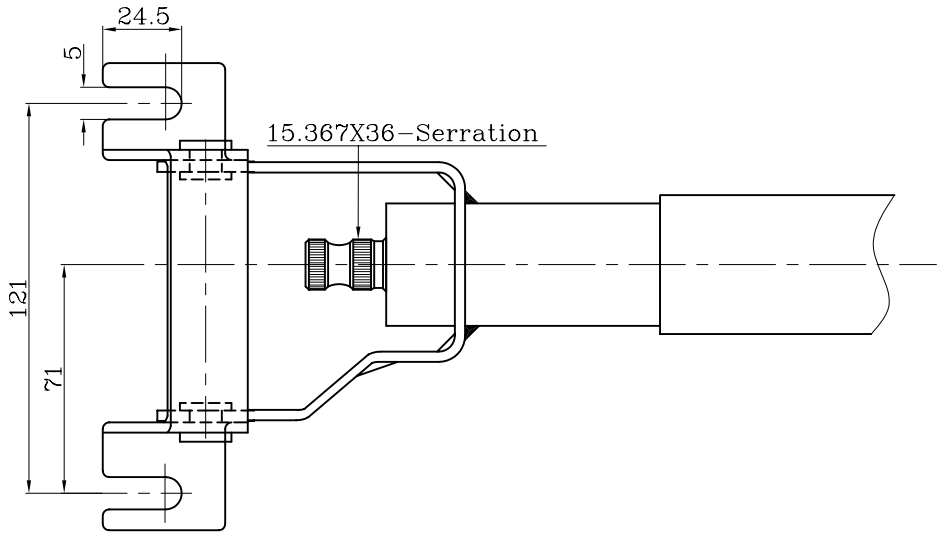

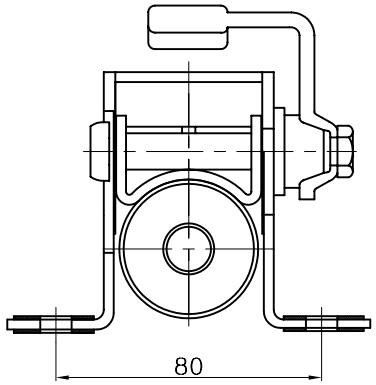

SECTION A_A

DRAWING NO: 13-000000	F.K.S Co.		Name	Sign	Date
		DRA	Heidari		14/9/10
		CHD	Boroujerdi		
		APD	Boroujerdi		
Title: Pride Steering Column		Material: --		Scale: --	
		Weight: --		Number: 1	
		Thickness: --		Hardness: --	